Kapasitansi dan Dielektrik
(*Capacitance and Dielectrics*)

Halliday-Resnick-Walker, Fundamentals of Physics

DEFINITION OF CAPACITANCE

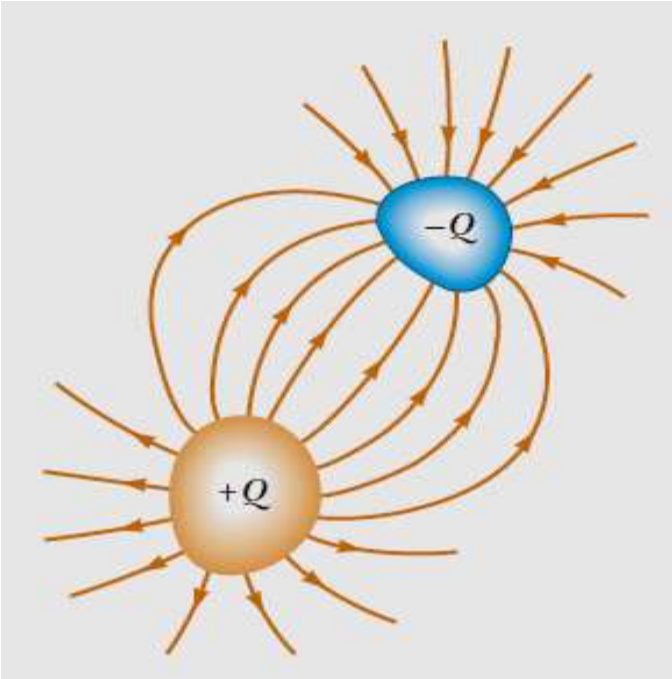

The **capacitance** C of a capacitor is the ratio of the magnitude of the charge on either conductor to the magnitude of the potential difference between them:

$$C \equiv \frac{Q}{\Delta V} \qquad \textbf{(26.1)}$$

Satuan : $1\text{F} = 1\dfrac{\text{C}}{\text{V}}$

- **Kapasitansi Keping Sejajar:**

$$\Delta V = \int \mathbf{E} \cdot \mathrm{d}\mathbf{r} = \int_0^d E_x \mathrm{d}x = E_x d$$

Medan listrik diantara kedua keeping konduktor

$$E_x = \frac{\sigma}{\varepsilon_0} = \frac{Q}{\varepsilon_0 A}$$

$$C = \frac{Q}{\Delta V} = \frac{Q}{E_x d}$$

$$C = \frac{\varepsilon_0 A}{d}$$

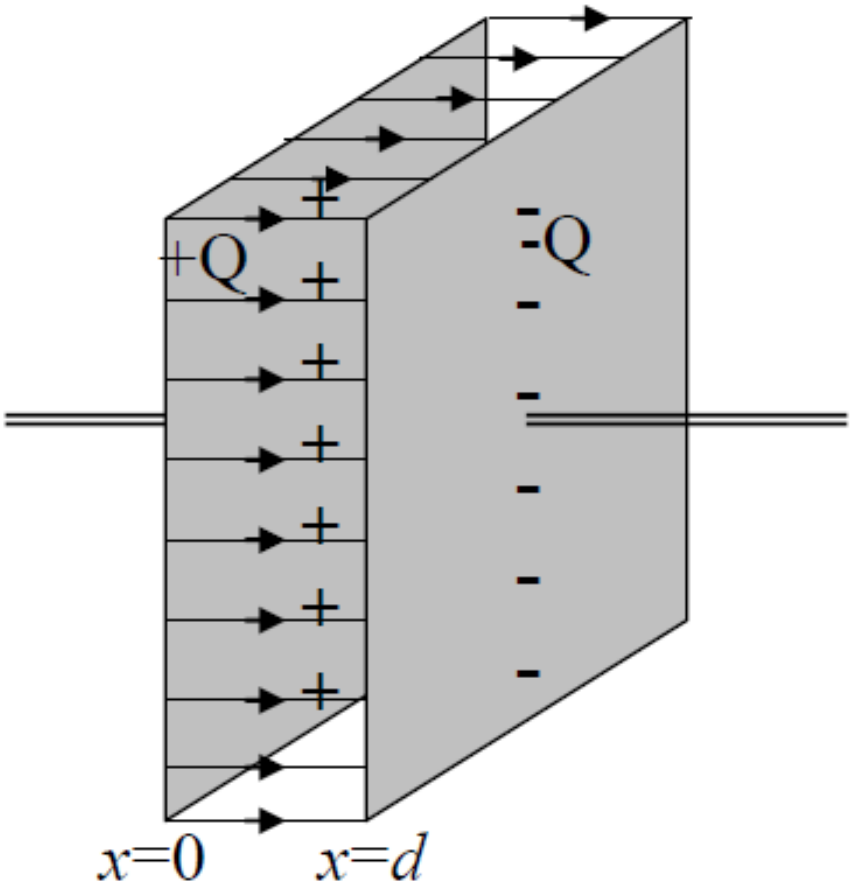

Parallel-Plate Capacitors

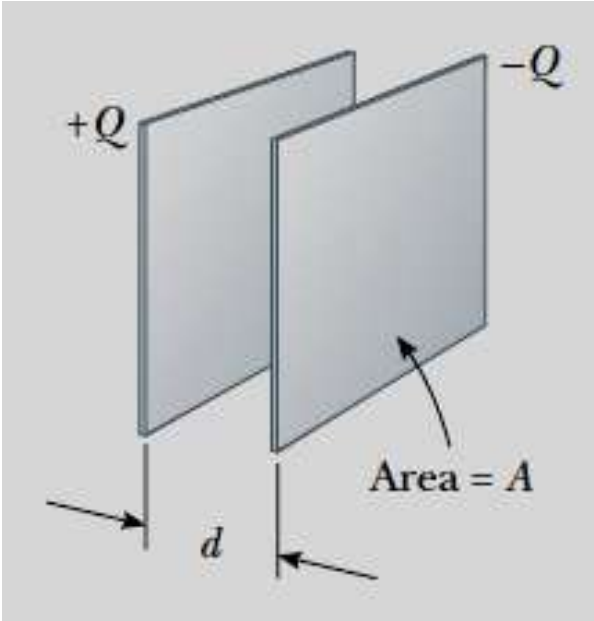

$$E = \frac{\sigma}{\epsilon_0} = \frac{Q}{\epsilon_0 A} \qquad \Delta V = Ed = \frac{Qd}{\epsilon_0 A}$$

$$C = \frac{Q}{\Delta V} = \frac{Q}{Qd/\epsilon_0 A}$$

$$C = \frac{\epsilon_0 A}{d}$$

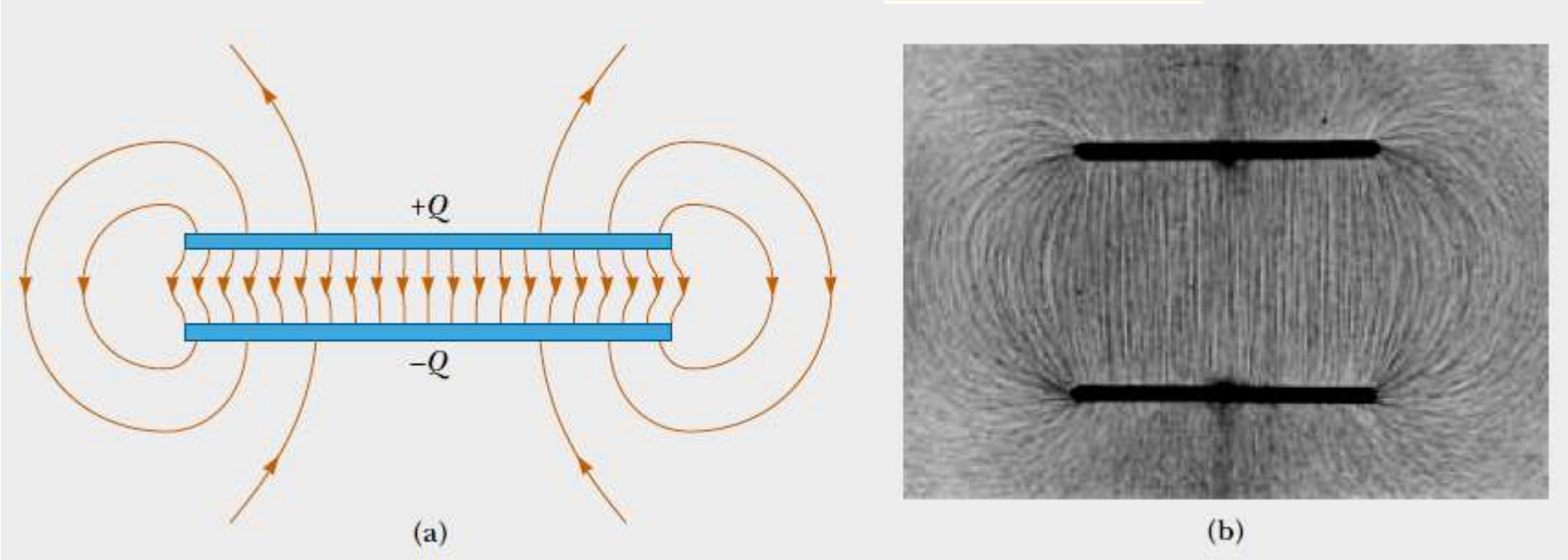

The Cylindrical Capacitor

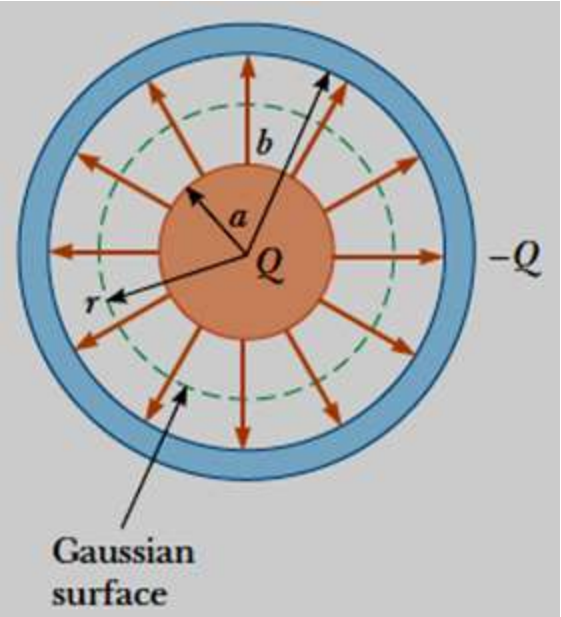

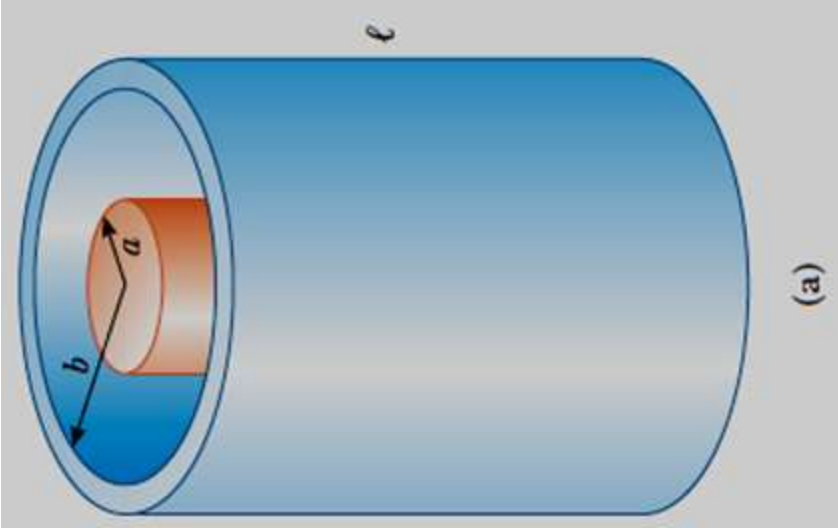

$$\Delta V = \int_a^b E(r)\mathrm{d}r \qquad E(2\pi r L) = \frac{Q}{\varepsilon_0} \qquad E = \frac{Q}{2\pi\varepsilon_0 L r}$$

$$\Delta V = \int_a^b \frac{Q}{2\pi\varepsilon_0 L r}\mathrm{d}r = \frac{Q}{2\pi\varepsilon_0 L}\ln(b/a)$$

Kapasitansinya adalah:

$$C = \frac{Q}{\Delta V} = \frac{Q}{\dfrac{Q}{2\pi\varepsilon_0 L}\ln(b/a)} \qquad C = \frac{2\pi\varepsilon_0 L}{\ln(a/b)}$$

- **Kapasitansi Dua Konduktor Lingkaran Konsentrik**

$$E_r = k\frac{Q}{r^2} \quad a < r < b$$

$$\Delta V = V_a - V_b = \int_a^b E_r \mathrm{d}r$$

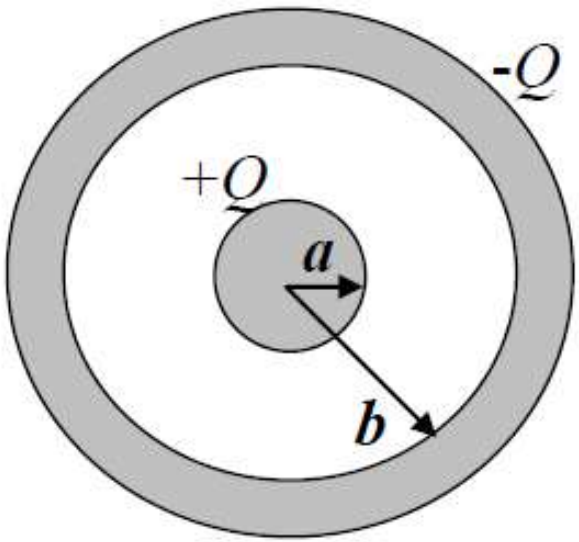

$$\Delta V = kQ\int_a^b \frac{\mathrm{d}r}{r^2} = kQ\left(\frac{1}{a} - \frac{1}{b}\right)$$

$$\Delta V = \frac{kQ(b-a)}{ab}$$

$$C = \frac{Q}{\Delta V} = \frac{ab}{k(b-a)} = \frac{4\pi\varepsilon_0 ab}{(b-a)}$$

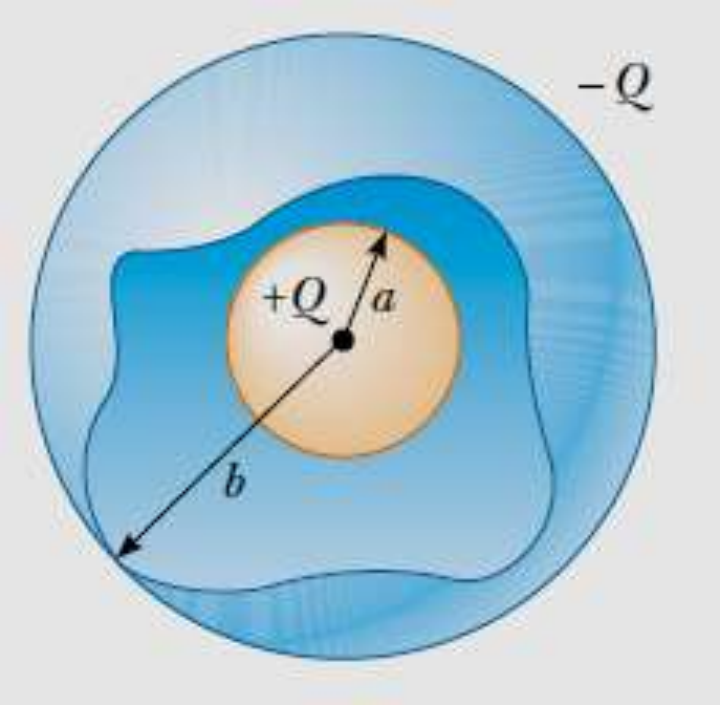

The Spherical Capacitor

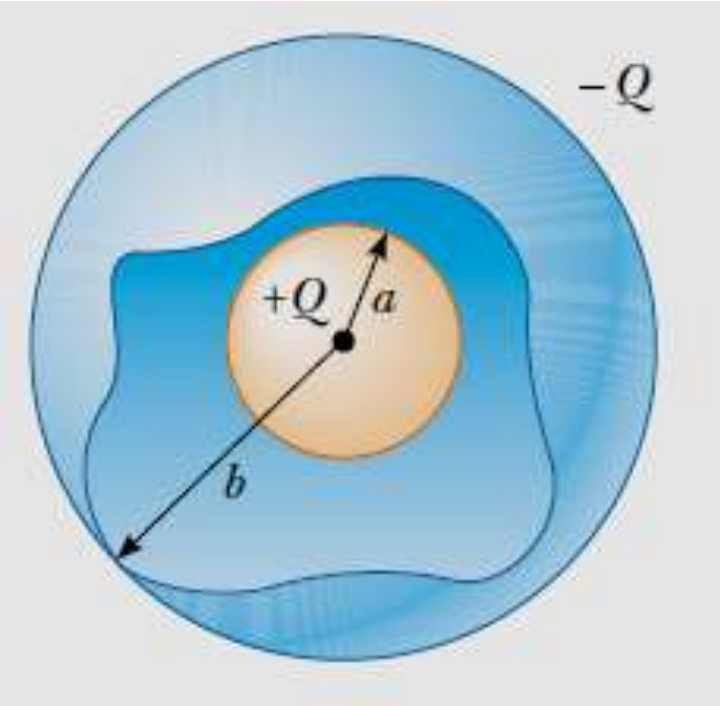

$$V_b - V_a = -\int_a^b E_r\,dr = -k_eQ\int_a^b \frac{dr}{r^2} = k_eQ\left[\frac{1}{r}\right]_a^b$$
$$= k_eQ\left(\frac{1}{b} - \frac{1}{a}\right)$$

$$\Delta V = |V_b - V_a| = k_eQ\frac{(b-a)}{ab}$$

$$C = \frac{Q}{\Delta V} = \frac{ab}{k_e(b-a)}$$

COMBINATIONS OF CAPACITORS

Parallel Combination

$$Q = Q_1 + Q_2$$

$$C_{eq}\,\Delta V = C_1\,\Delta V + C_2\,\Delta V$$

$$C_{eq} = C_1 + C_2 \qquad \left(\begin{array}{l}\text{parallel}\\ \text{combination}\end{array}\right)$$

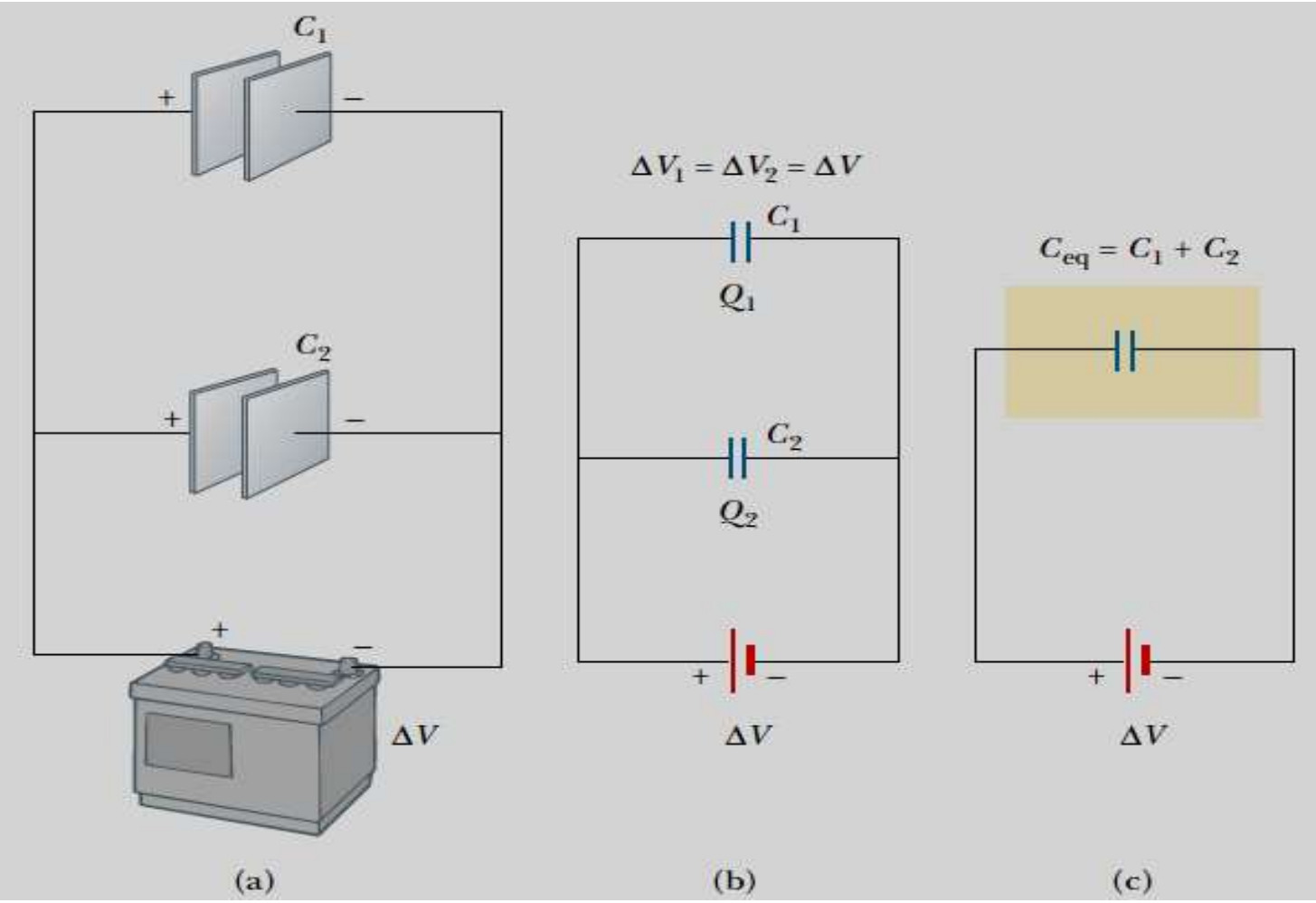

COMBINATIONS OF CAPACITORS

Series Combination

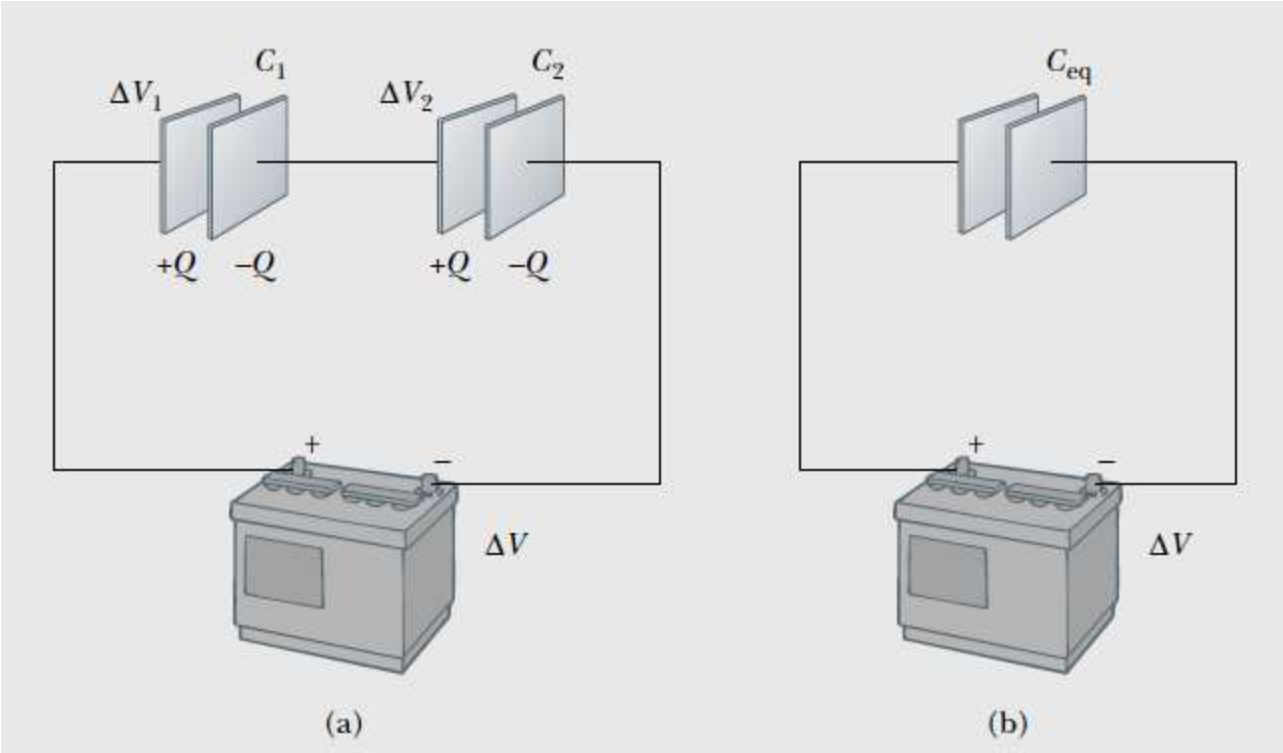

$$\Delta V = \Delta V_1 + \Delta V_2$$

$$\frac{Q}{C_{eq}} = \frac{Q}{C_1} + \frac{Q}{C_2}$$

$$\frac{1}{C_{eq}} = \frac{1}{C_1} + \frac{1}{C_2} \quad \begin{pmatrix}\text{series} \\ \text{combination}\end{pmatrix}$$

ENERGY STORED IN A CHARGED CAPACITOR

This bank of capacitors stores electrical energy for use in the particle accelerator at FermiLab, located outside Chicago.

$$dW = \Delta V\, dq = \frac{q}{C}\, dq$$

$$W = \int_0^Q \frac{q}{C}\, dq = \frac{1}{C}\int_0^Q q\, dq = \frac{Q^2}{2C}$$

$$U = \frac{Q^2}{2C} = \tfrac{1}{2}Q\,\Delta V = \tfrac{1}{2}C(\Delta V)^2$$

CAPACITORS WITH DIELECTRICS

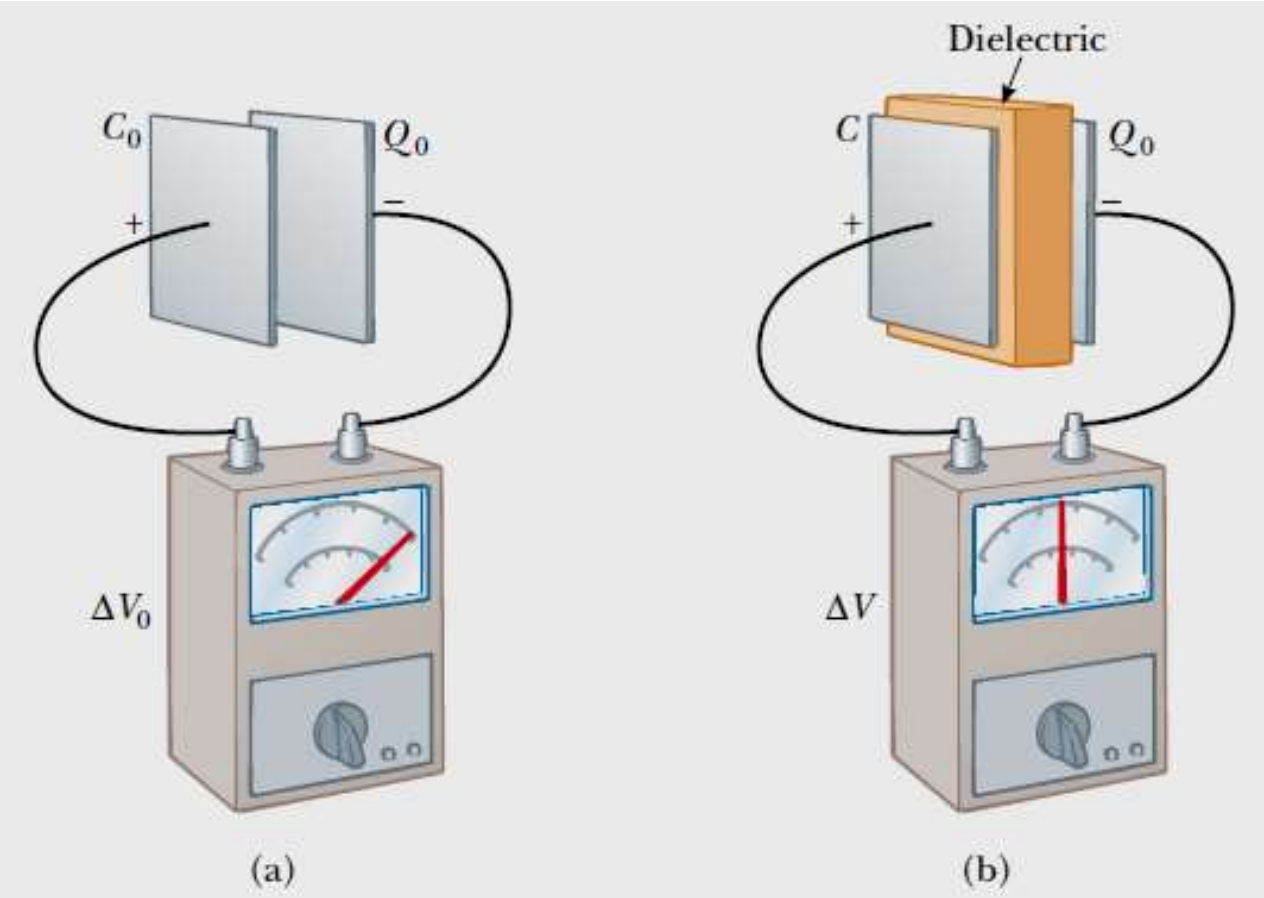

$$C = \kappa C_0$$

$$C = \kappa \frac{\epsilon_0 A}{d}$$

TABLE 26.1 Dielectric Constants and Dielectric Strengths of Various Materials at Room Temperature

Material	Dielectric Constant κ	Dielectric Strength[a] (V/m)
Air (dry)	1.000 59	3×10^6
Bakelite	4.9	24×10^6
Fused quartz	3.78	8×10^6
Neoprene rubber	6.7	12×10^6
Nylon	3.4	14×10^6
Paper	3.7	16×10^6
Polystyrene	2.56	24×10^6
Polyvinyl chloride	3.4	40×10^6
Porcelain	6	12×10^6
Pyrex glass	5.6	14×10^6
Silicone oil	2.5	15×10^6
Strontium titanate	233	8×10^6
Teflon	2.1	60×10^6
Vacuum	1.000 00	—
Water	80	—

[a] The dielectric strength equals the maximum electric field that can exist in a dielectric without electrical breakdown. Note that these values depend strongly on the presence of impurities and flaws in the materials.

Types of Capacitors

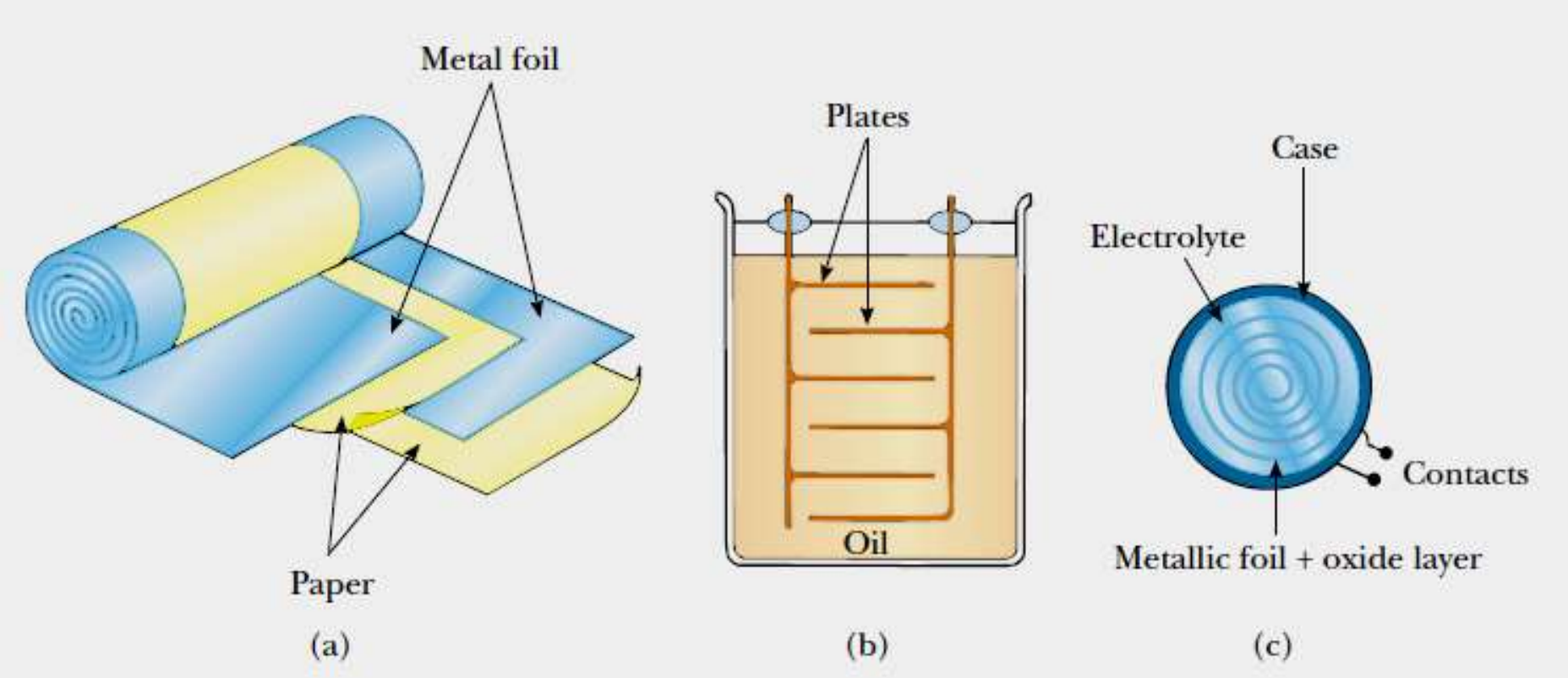

AN ATOMIC DESCRIPTION OF DIELECTRICS

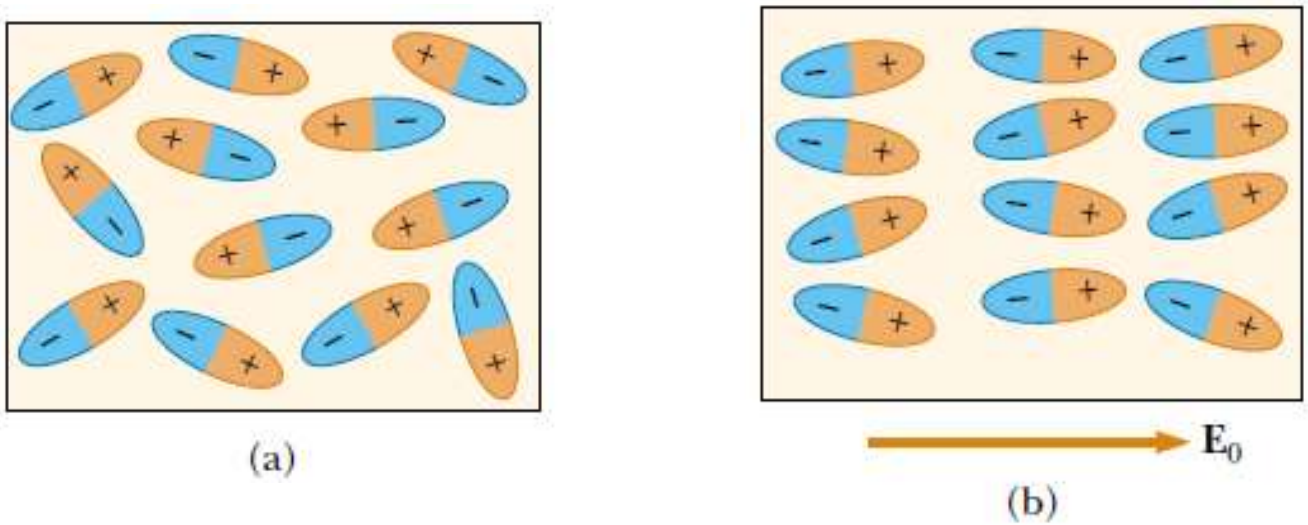

(a) Polar molecules are randomly oriented in the absence of an external electric field.
(b) (b) When an external field is applied, the molecules partially align with the field.

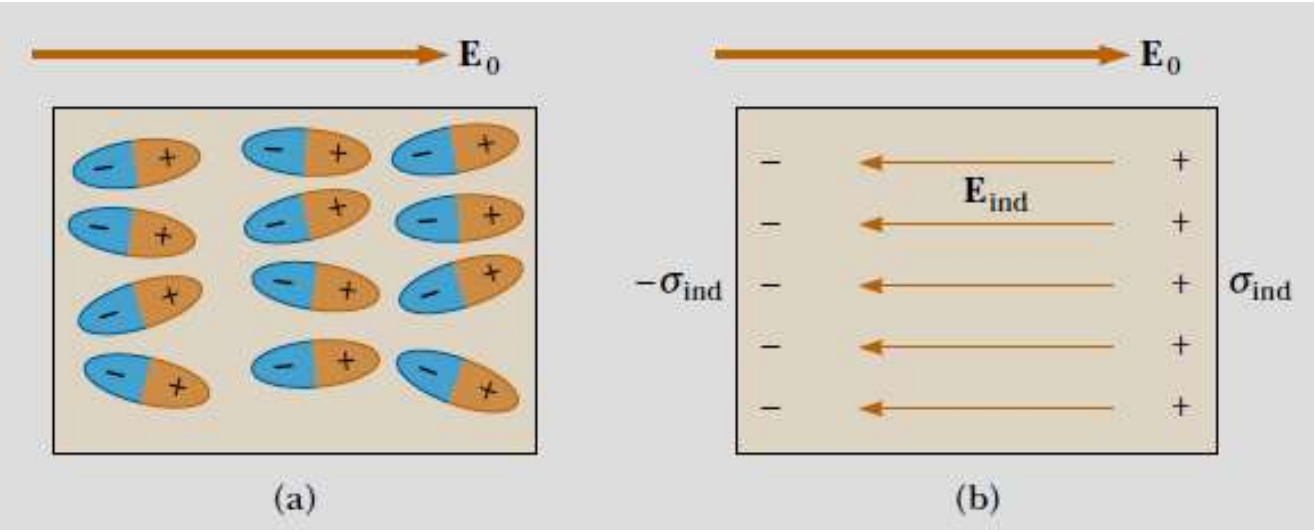

AN ATOMIC DESCRIPTION OF DIELECTRICS

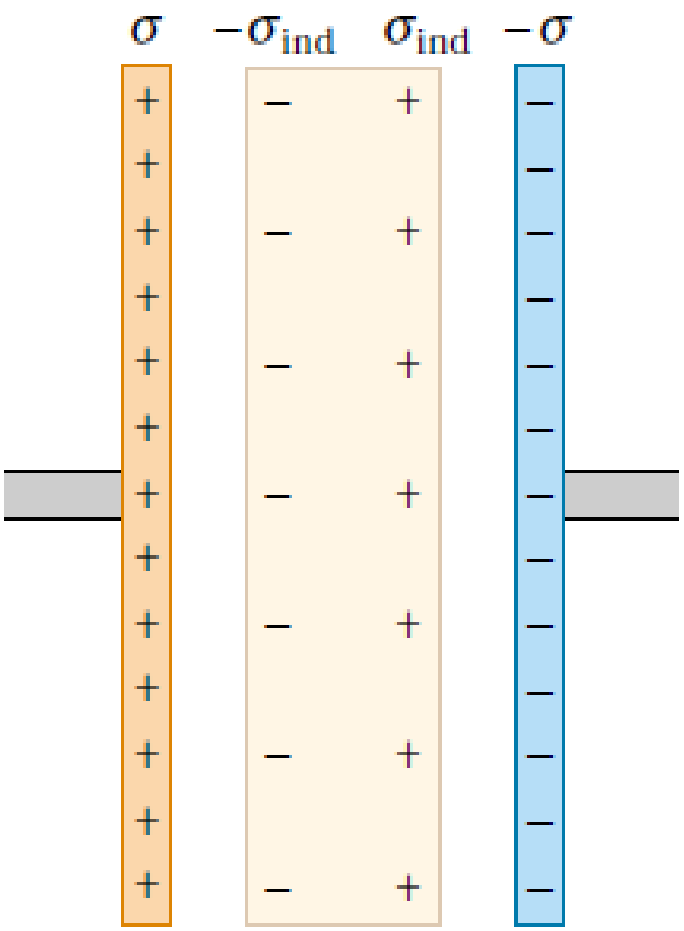

$$\mathbf{E} = \frac{\mathbf{E}_0}{\kappa}$$

$$E = E_0 - E_{\text{ind}}$$

$$\frac{\sigma}{\kappa\epsilon_0} = \frac{\sigma}{\epsilon_0} - \frac{\sigma_{\text{ind}}}{\epsilon_0}$$

$$\sigma_{\text{ind}} = \left(\frac{\kappa - 1}{\kappa}\right)\sigma$$

Effect of a Metallic Slab

A parallel-plate capacitor has a plate separation *d* and plate area *A*. An uncharged metallic slab of thickness a is inserted midway between the plates. Find the capacitance of the device.

$$\frac{1}{C} = \frac{1}{C_1} + \frac{1}{C_2} = \frac{1}{\dfrac{\epsilon_0 A}{(d-a)/2}} + \frac{1}{\dfrac{\epsilon_0 A}{(d-a)/2}}$$

$$C = \frac{\epsilon_0 A}{d-a}$$

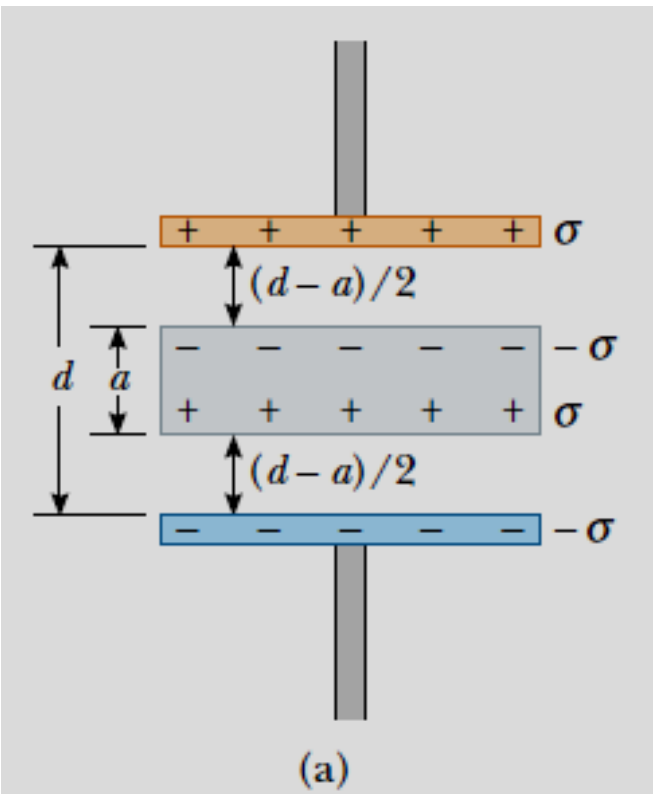

(a)

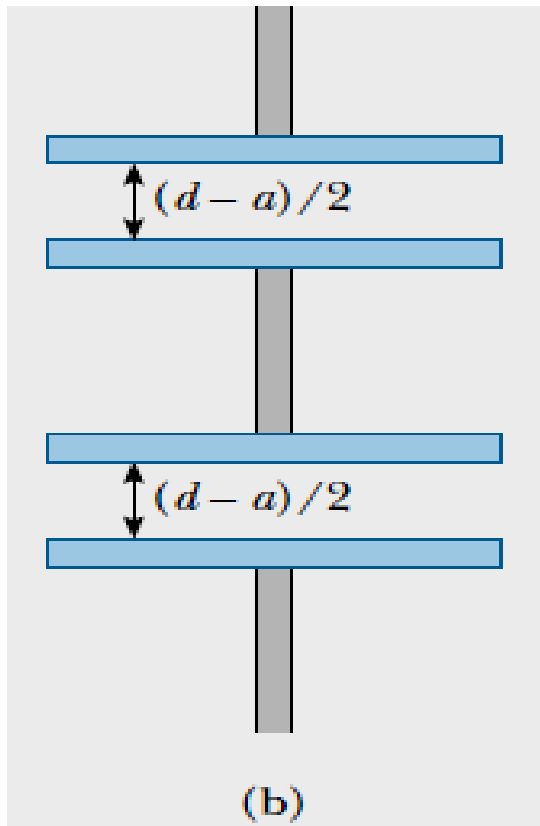

(b)

$$C = \lim_{a \to 0} \frac{\epsilon_0 A}{d-a} = \frac{\epsilon_0 A}{d}$$

Direct Current Circuits

ELECTROMOTIVE FORCE

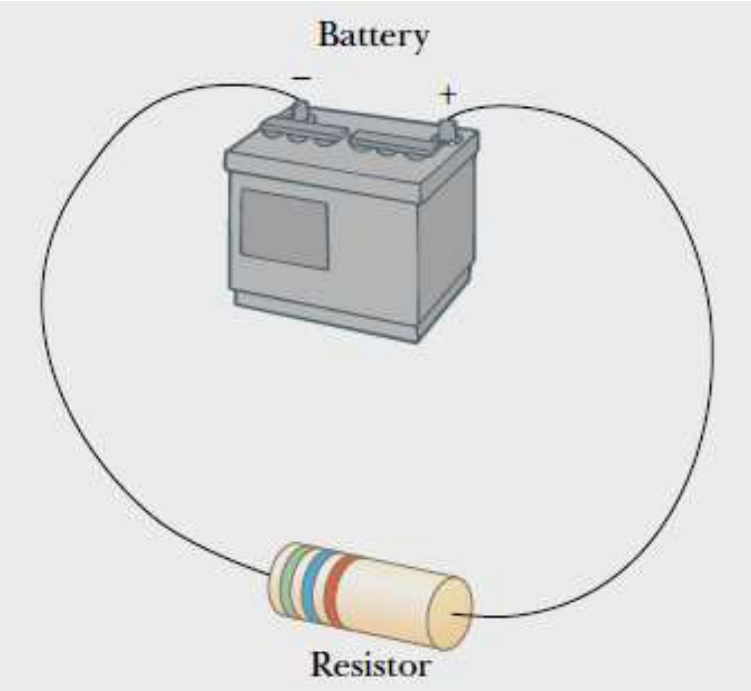

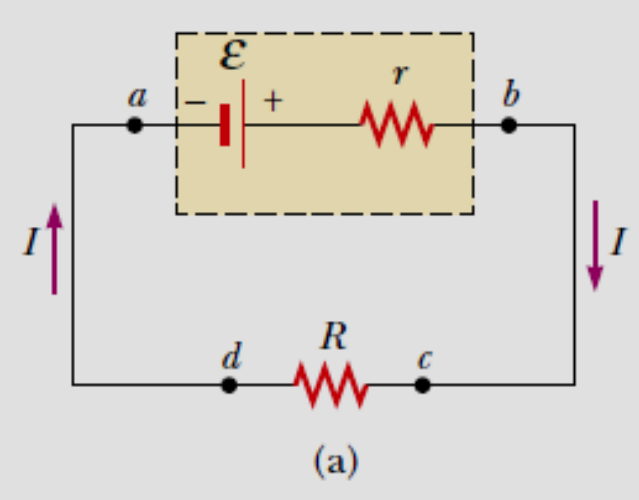

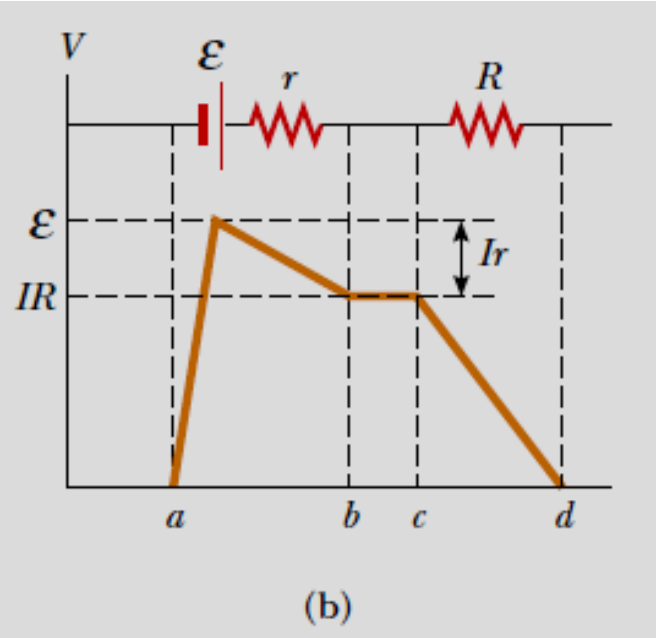

$$\Delta V = \mathcal{E} - Ir \qquad \mathcal{E} = IR + Ir$$

$$I = \frac{\mathcal{E}}{R + r}$$

RESISTORS IN SERIES AND IN PARALLEL

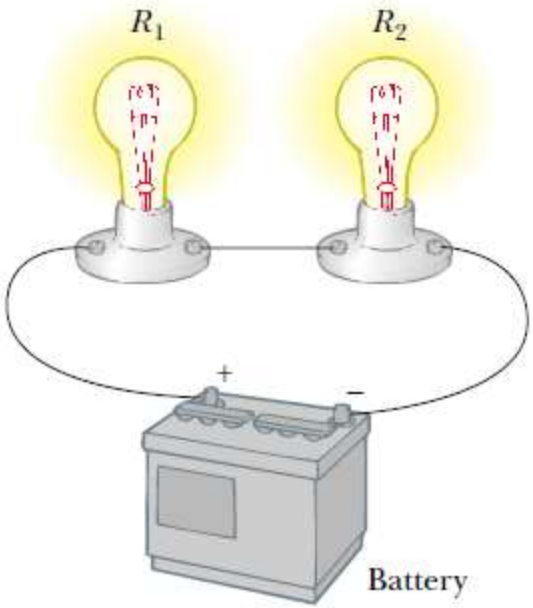

(a)

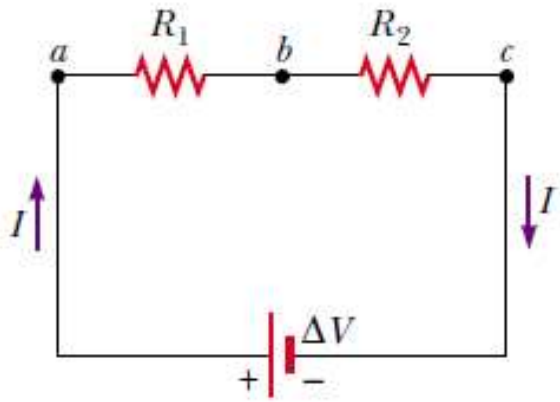

(b)

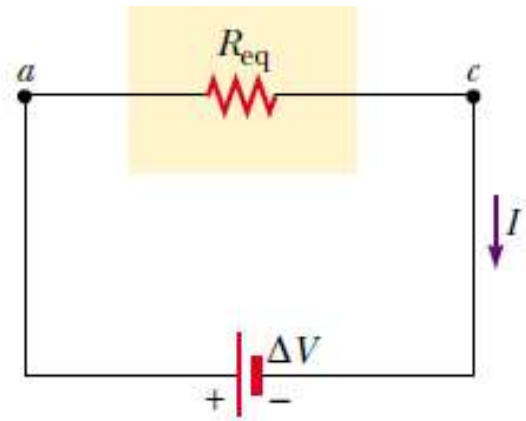

(c)

$$R_{eq} = R_1 + R_2 + R_3 + \cdots$$

RESISTORS IN SERIES AND IN PARALLEL

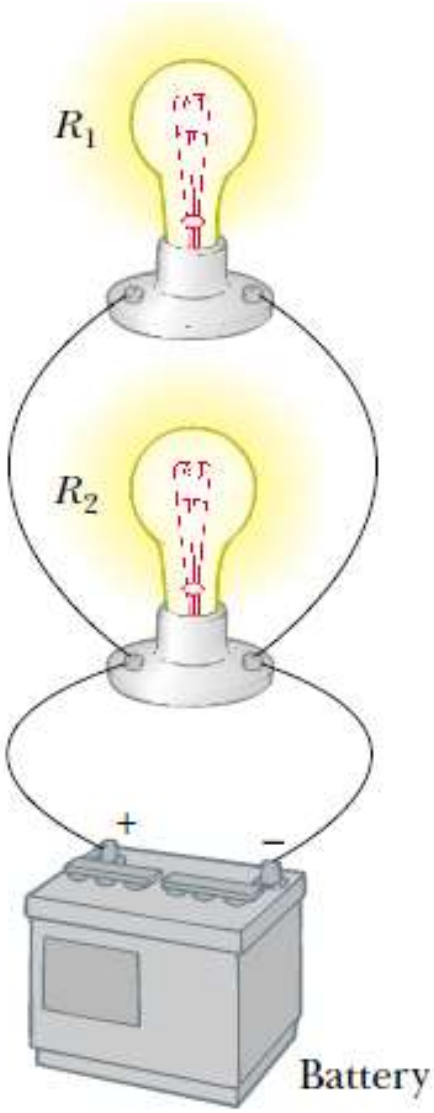

(a)

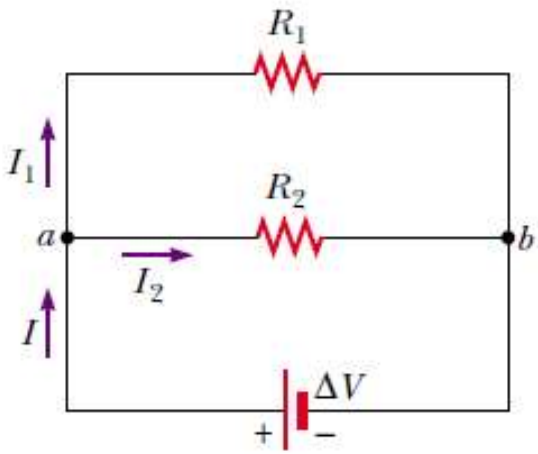

(b)

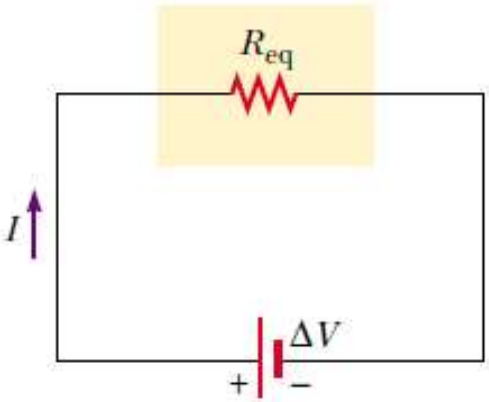

(c)

$$\frac{1}{R_{eq}} = \frac{1}{R_1} + \frac{1}{R_2} + \frac{1}{R_3} + \cdots$$

Charging a Capacitor

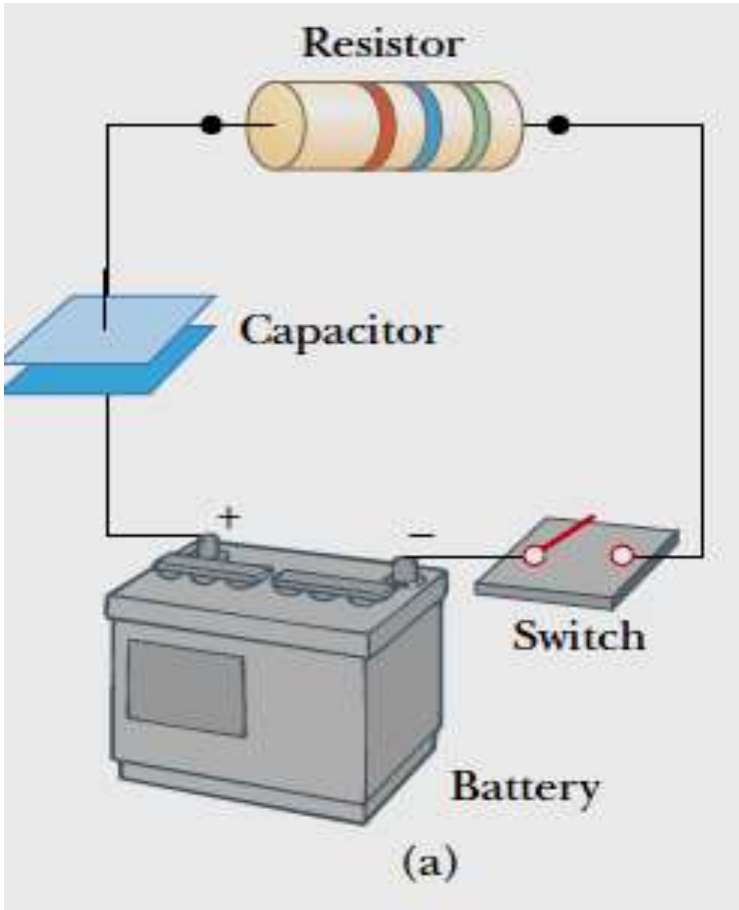

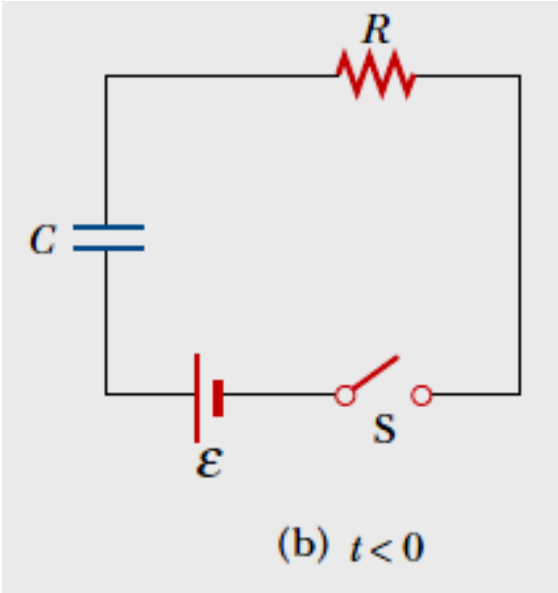

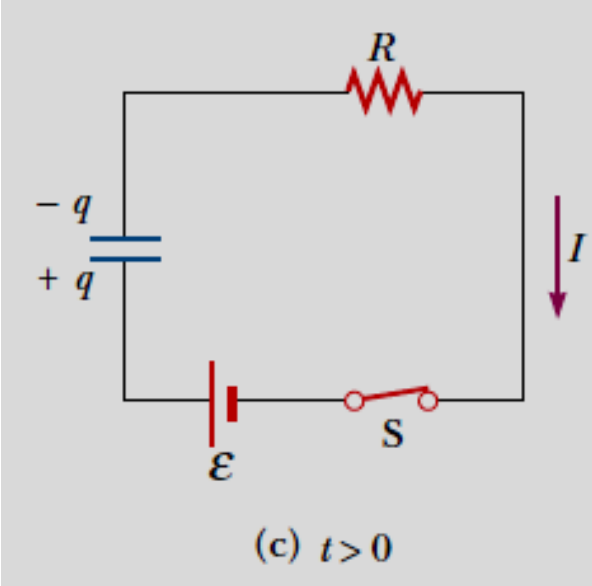

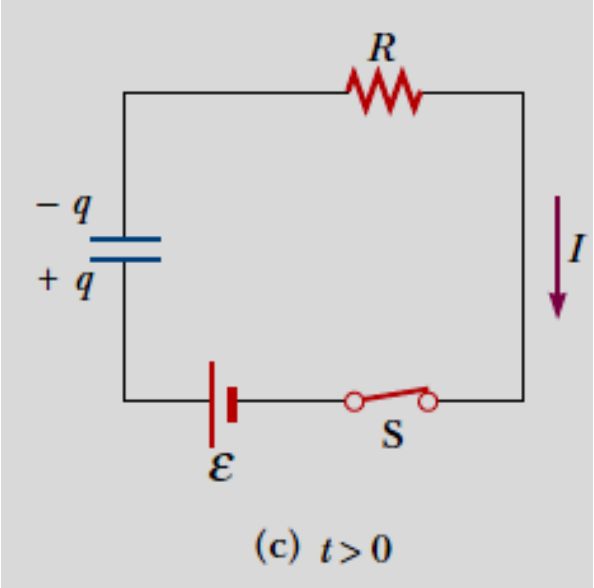

$$V - \frac{Q}{C} - iR = 0 \quad *)$$

dengan menggunakan: $i = \frac{dq}{dt}$

$$-\frac{1}{C}i - R\frac{di}{dt} = 0 \qquad \frac{di}{i} = -\frac{1}{RC}dt$$

$$i = \frac{V}{R}e^{-r/RC} = i_0 e^{-t/RC}$$

dari persamaan *)

$$Q(t) = CV(1 - e^{-t/RC})$$

dari persamaan *)

$$Q(t) = CV(1 - e^{-t/RC})$$

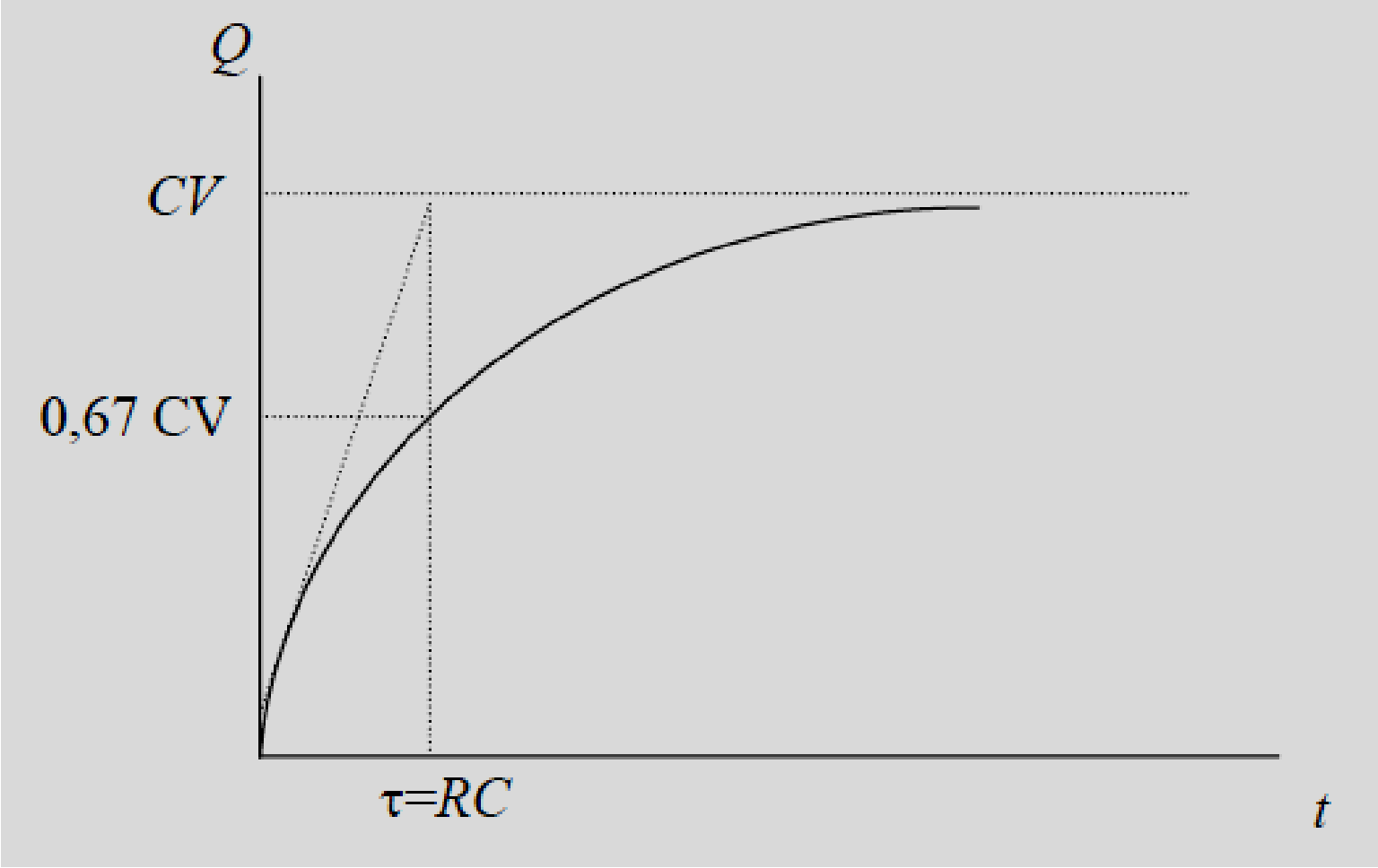

e =2.718281828459045235360287471352662497757247093699 95...

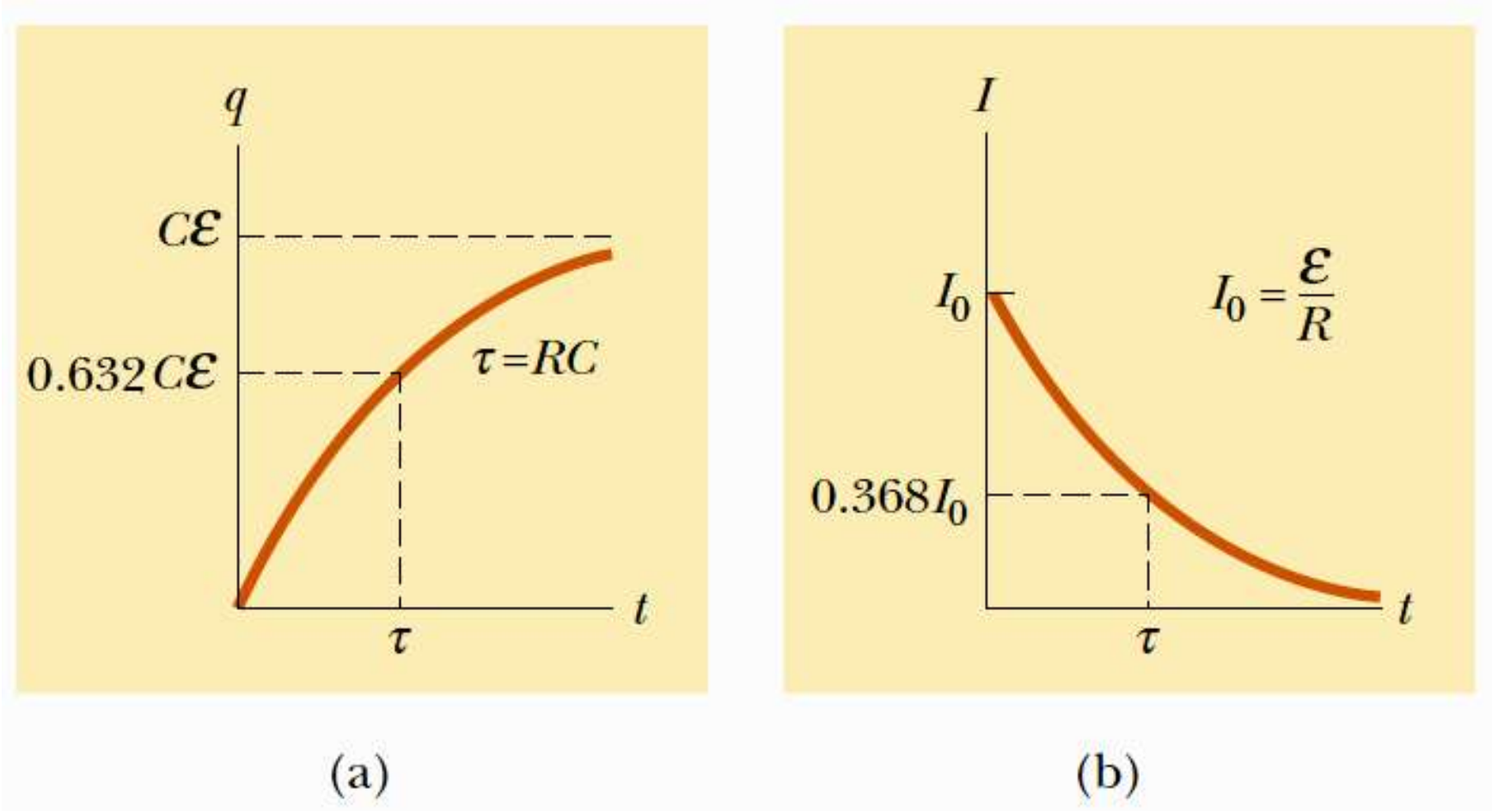

Discharging a Capacitor

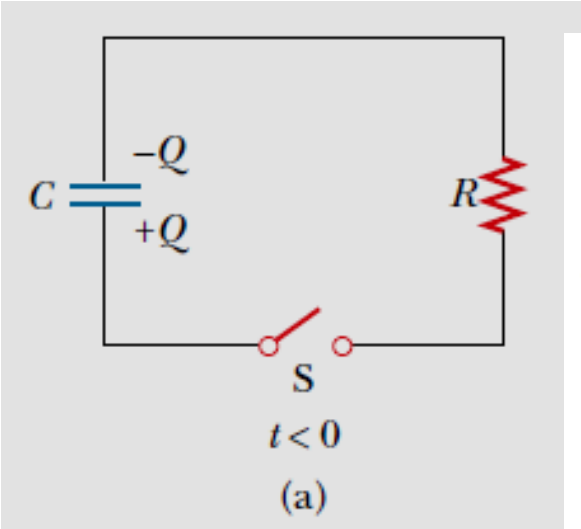

$$\frac{Q}{C} - iR = 0 \qquad \frac{1}{C}\frac{dQ}{dt} - R\frac{di}{dt} = 0$$

- arus dalam rangkaian sama dengan laju penu-runan muatan Q di C, sehingga :

$$i = -\frac{dQ}{dt} \qquad \frac{di}{dt} = -\frac{i}{RC}$$

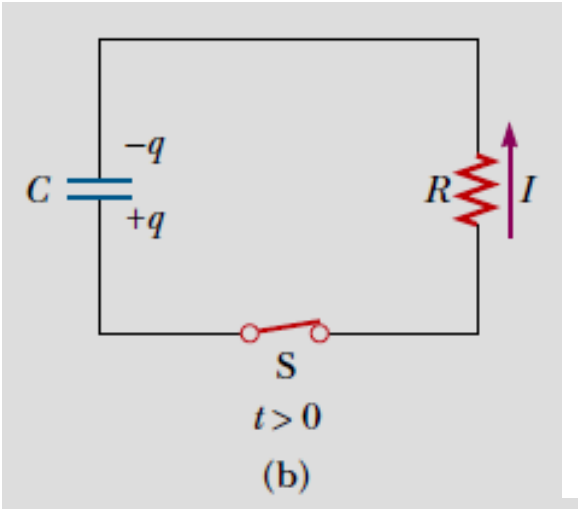

$$\frac{di}{i} = -\frac{1}{RC}dt \qquad \int_{i=\Delta V_0/R}^{i=i_f} \frac{di}{i} = -\frac{1}{RC}\int_{t=0}^{t=t_f} dt$$

$$i = \frac{\Delta V_0}{R} e^{-r/RC} = i_0 e^{-t/RC}$$

Discharging a Capacitor

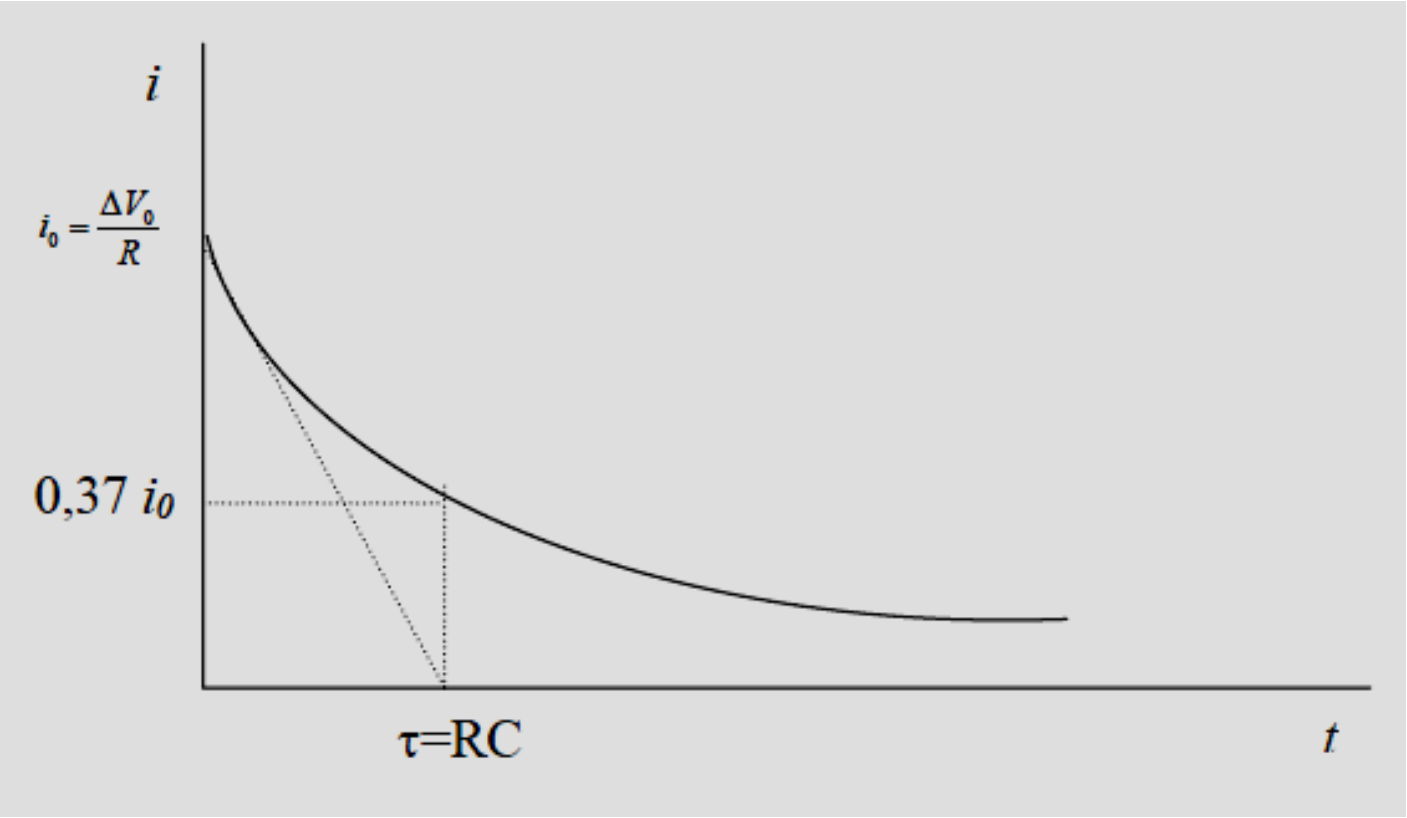

$$i = \frac{\Delta V_0}{R} e^{-r/RC} = i_0 e^{-t/RC}$$